AHP MERKLE®
IBÉRICA LDA

Mechanical Chain Lifter

MCL

Mechanical Chain Lifter

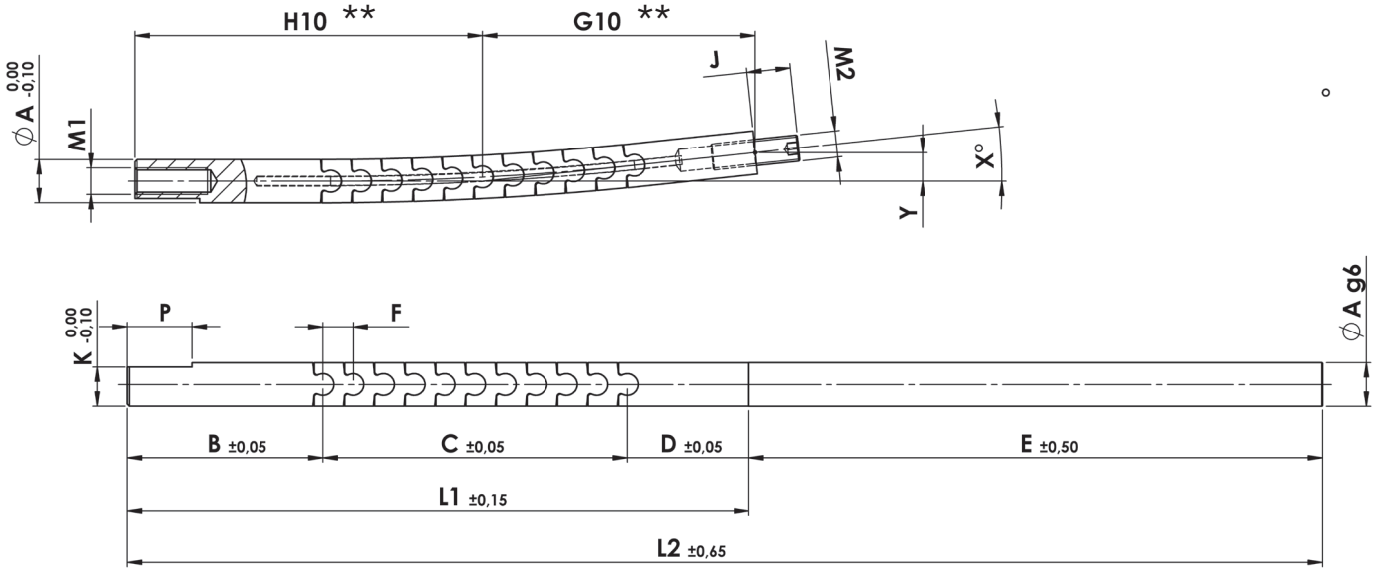

MODEL	GENERAL DIMENSIONS																
	A	B	C	D	E	F	G6	G10	H6	H10	J	K	L1	L2	M1	M2	P
MCL0606	6	35,8	26,1	30	X	4,35	41,1	x	48,9	x	6	5,45	90	170	M4	M4	12
MCL0806	8	30	18	18	X	5,8	45,6	x	64,4	x	8	7,45	110	226	M5	M5	20
MCL1206	12	38	25	25	X	11	68,2	x	101,8	x	15	10,95	170	316/416	M8	M8	25
MCL2006	20	60	66	35	X	14	98	x	132	x	20	17,95	230	394/525	M12	M12	30
MCL1210	12	38	110	25	X	11	x	90,2	x	123,8	15	10,95	214	360/460	M8	M8	25
MCL2010	20	60	35	35	X	14	x	126	x	160	20	17,95	286	450/581	M12	M12	30
EMCL0680	6				80										M4	M4	
EMCL08116	8				116										M5	M5	
EMCL12146 EMCL12246	12				146/246										M8	M8	
EMCL20164 EMCL20295	20				164/295										M12	M12	

Reference example for extension Ø20x295: **EMCL2010295**

** The dimension G and H depends upon the amount of chains, G6/H6 or G10/H10

Mechanical Chain Lifter

6 Chains - Maximum ejection stroke 60mm

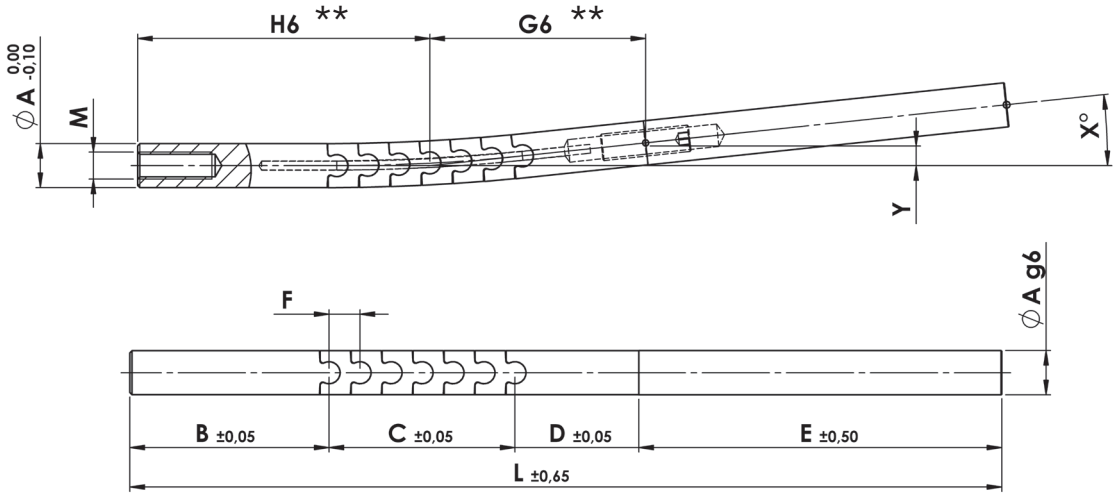

10 Chains - Maximum ejection stroke 120mm

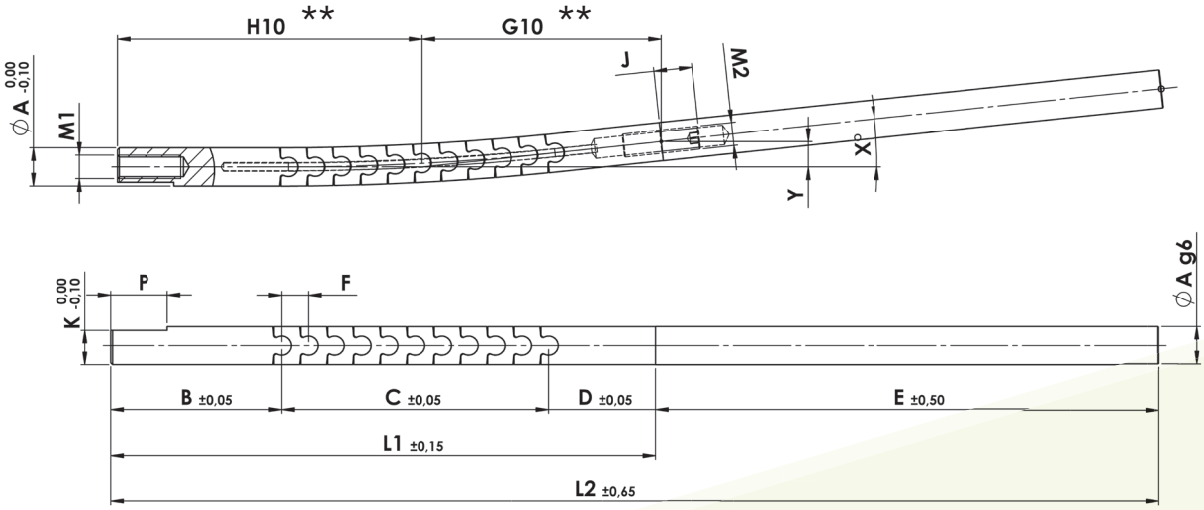

MODEL	MAX. STROKE 60 mm		MODEL	MAX. STROKE 60 mm		MODEL	MAX. STROKE 60 mm		MODEL	MAX. STROKE 60 mm		MODEL	MAX. STROKE 120 mm		MODEL	MAX. STROKE 120 mm	
	X°	Y		X°	Y		X°	Y		X°	Y		X°	Y		X°	Y
MCL0606	3	2,1	MCL0806	3	2,4	MCL1206	3	3,6	MCL2006	3	5,1	MCL-12x10	3	4,72	MCL-20x10	3	6,6
MCL0606	4	2,9	MCL0806	4	3,2	MCL1206	4	4,7	MCL2006	4	6,8	MCL-12x10	4	6,3	MCL-20x10	4	8,8
MCL0606	5	3,6	MCL0806	5	4	MCL1206	5	5,9	MCL2006	5	8,6	MCL-12x10	5	7,9	MCL-20x10	5	11
MCL0606	6	4,3	MCL0806	6	4,7	MCL1206	6	7,1	MCL2006	6	10,3	MCL-12x10	6	9,5	MCL-20x10	6	13,2
MCL0606	7	5	MCL0806	7	5,6	MCL1206	7	8,3	MCL2006	7	12	MCL-12x10	7	11	MCL-20x10	7	15,5
												MCL-12x10	8	12,7	MCL-20x10	8	17,7
												MCL-12x10	9	14,3	MCL-20x10	9	19,9
												MCL-12x10	10	15,9	MCL-20x10	10	22,2

X= Angle Y= Stroke Maximum recommended angle 7° for 6 chains

The stroke multiplied by the Tangent of the angle, gives us the de-moulding stroke of the slider

Mechanical Chain Lifter

TOOL EXAMPLE

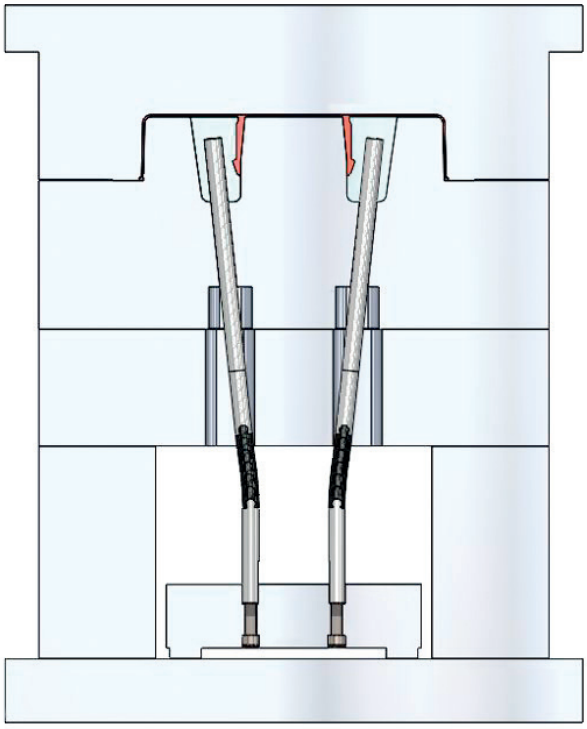

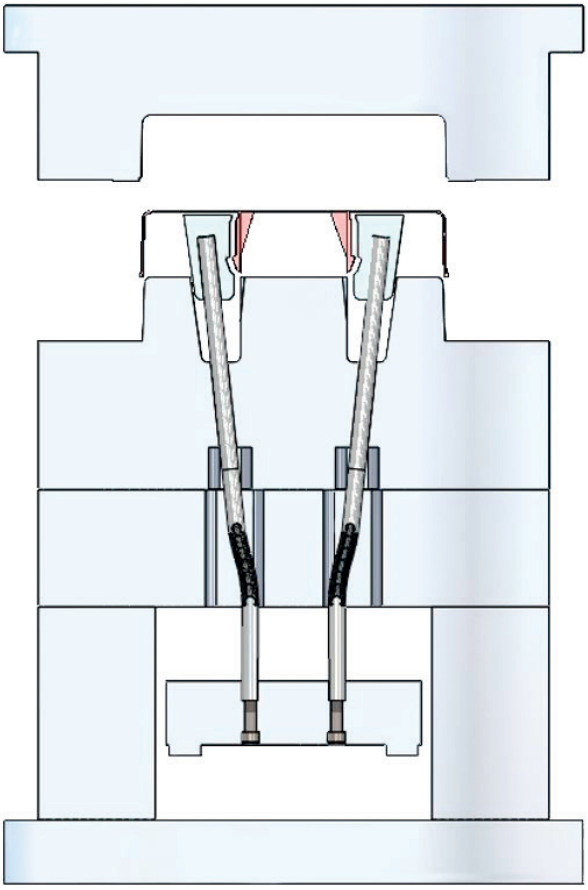

AHP Merkle Ibérica, Lda.
Rua de Leiria nº 93, Embra | 2430-091 Marinha Grande | Portugal
Tel.: +351 244 200 301 | www.pt.ahp.de